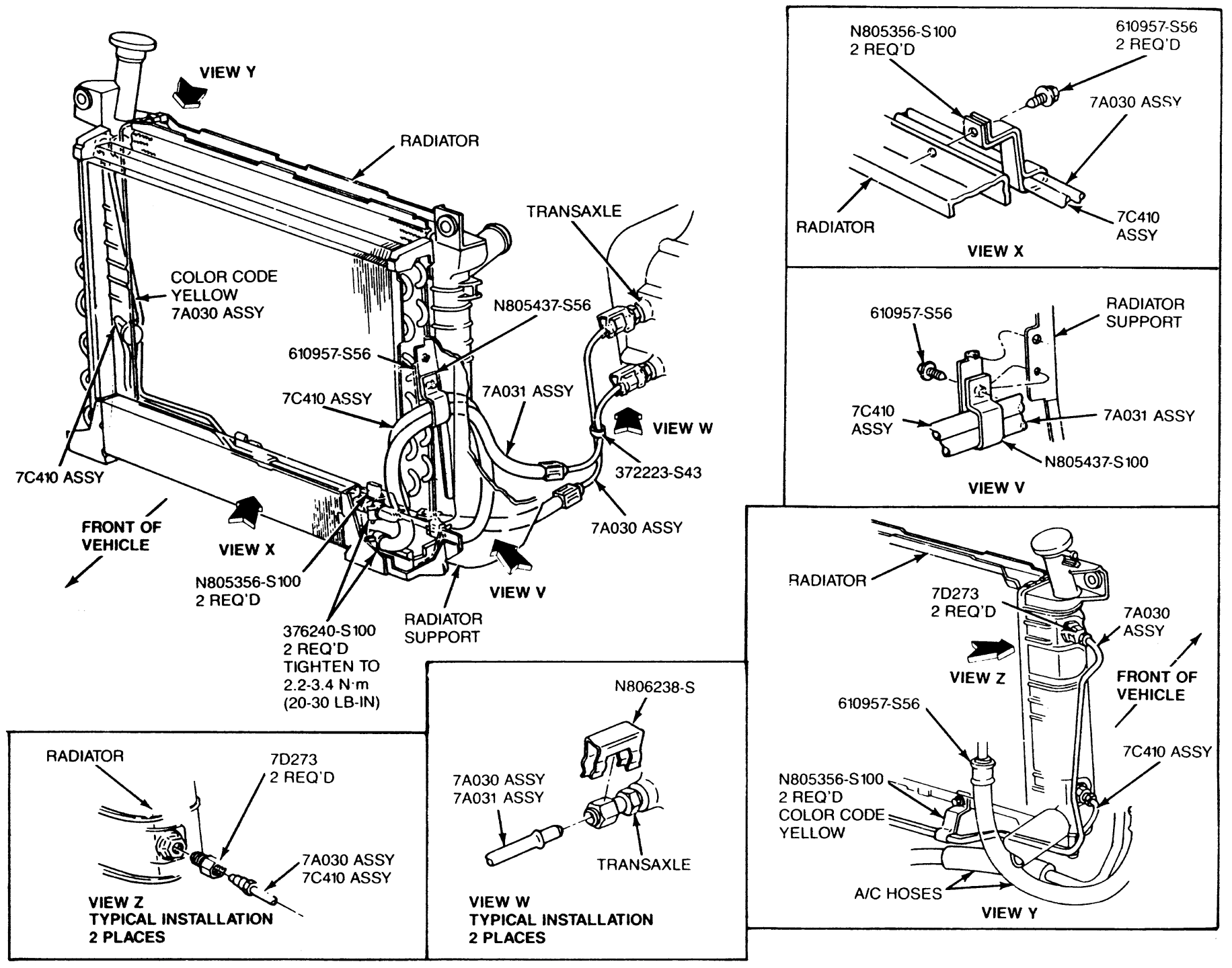
VIEW Y
RADIATOR
TRANSAXLE
COLOR CODE
YELLOW
7A030 ASSY
N805437-S56
610957-S56
7C410 ASSY
7A031 ASSY
VIEW W
7C410 ASSY
372223-S43
FRONT OF
VEHICLE
VIEW X
7A030 ASSY
N805356-S100
2 REQ'D
VIEW V
376240-S100
2 REQ'D
TIGHTEN TO
2.2-3.4 N·m
(20-30 LB-IN)
RADIATOR
SUPPORT
N805356-S100
2 REQ'D
610957-S56
2 REQ'D
7A030 ASSY
RADIATOR
7C410
ASSY
VIEW X
610957-S56
RADIATOR
SUPPORT
7C410
ASSY
7A031 ASSY
N805437-S100
VIEW V
RADIATOR
7D273
2 REQ'D
7A030
ASSY
VIEW Z
FRONT OF
VEHICLE
610957-S56
7C410 ASSY
N805356-S100
2 REQ'D
COLOR CODE
YELLOW
A/C HOSES
VIEW Y
RADIATOR
7D273
2 REQ'D
7A030 ASSY
7C410 ASSY
VIEW Z
TYPICAL INSTALLATION
2 PLACES
N806238-S
7A030 ASSY
7A031 ASSY
TRANSAXLE
VIEW W
TYPICAL INSTALLATION
2 PLACES