SHO

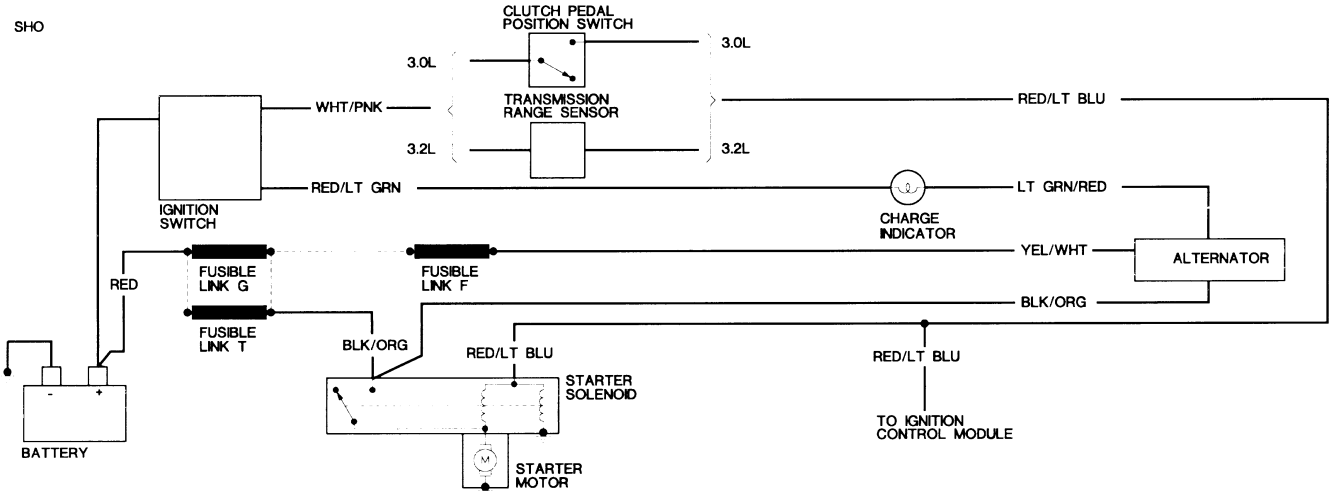
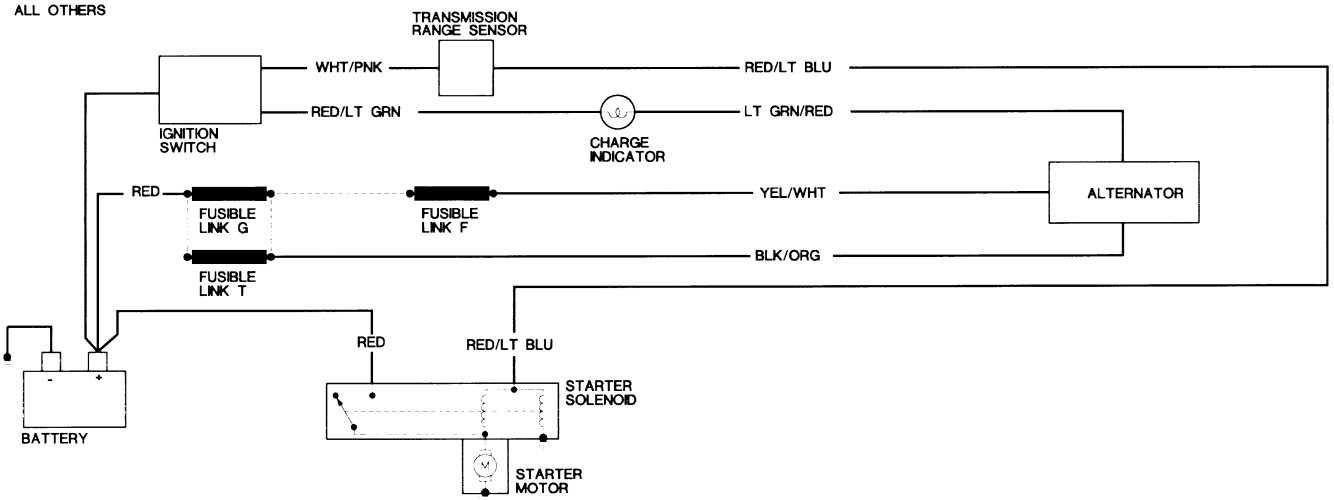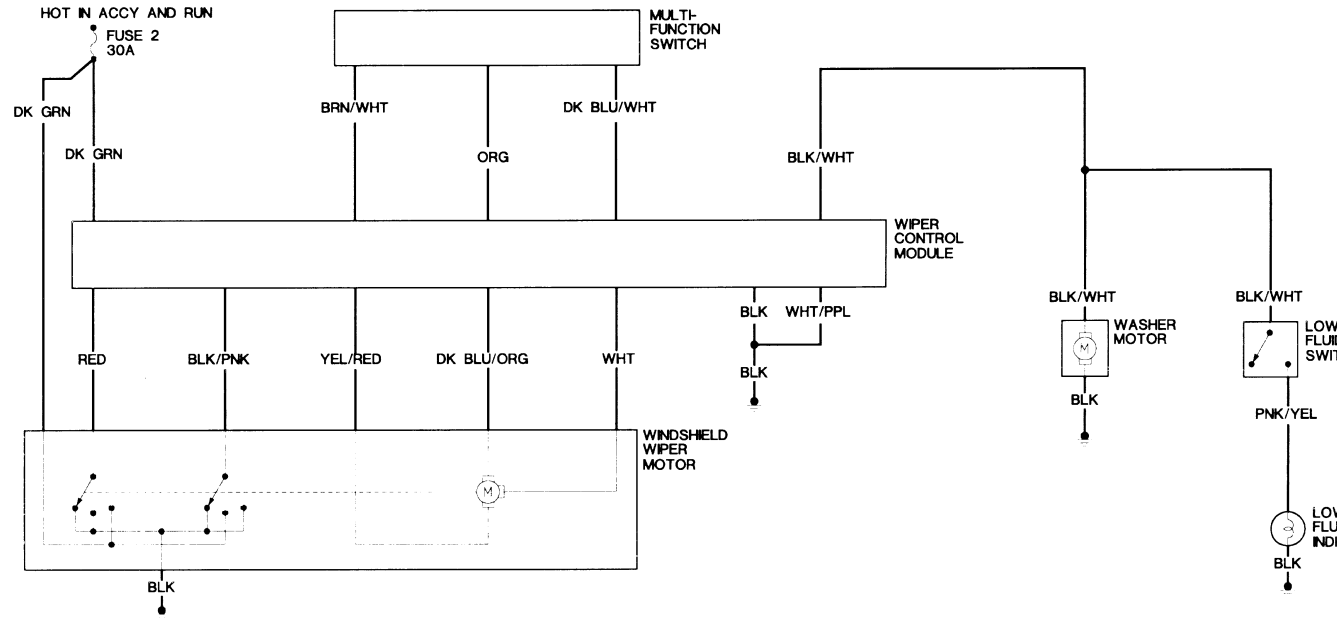
ALL OTHERS