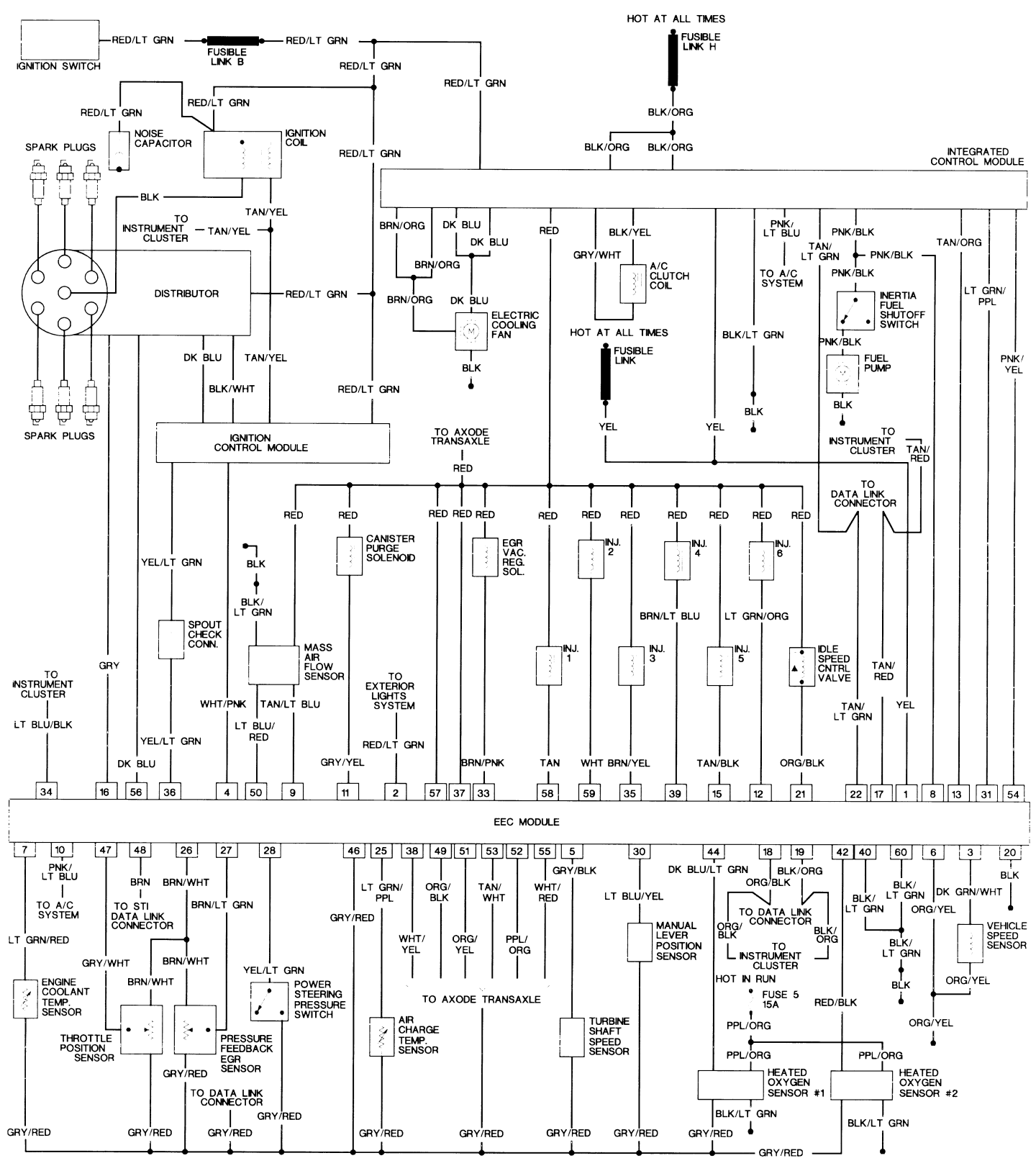
IGNITION SWITCH
RED/LT GRN
FUSIBLE LINK B
RED/LT GRN
RED/LT GRN
RED/LT GRN
RED/LT GRN
RED/LT GRN
NOISE CAPACITOR
IGNITION COIL
SPARK PLUGS
RED/LT GRN
BLK
TAN/YEL
TO INSTRUMENT CLUSTER
TAN/YEL
DISTRIBUTOR
RED/LT GRN
DK BLU
TAN/YEL
BLK/WHT
RED/LT GRN
SPARK PLUGS
IGNITION CONTROL MODULE
HOT AT ALL TIMES
FUSIBLE LINK H
BLK/ORG
BLK/ORG
BLK/ORG
INTEGRATED CONTROL MODULE
BRN/ORG
DK BLU
DK BLU
BRN/ORG
BRN/ORG
DK BLU
ELECTRIC COOLING FAN
BLK
RED
BLK/YEL
GRY/WHT
A/C CLUTCH COIL
HOT AT ALL TIMES
FUSIBLE LINK
YEL
YEL
BLK/LT GRN
BLK
PNK/ LT BLU
TO A/C SYSTEM
TAN/ LT GRN
PNK/BLK
PNK/BLK
PNK/BLK
INERTIA FUEL SHUTOFF SWITCH
PNK/BLK
FUEL PUMP
BLK
TO INSTRUMENT CLUSTER
TAN/ RED
TAN/ORG
LT GRN/ PPL
PNK/ YEL
TO AXODE TRANSAXLE
RED
TO DATA LINK CONNECTOR
RED
RED
RED RED RED
RED
RED
RED
RED
RED
RED
RED
CANISTER PURGE SOLENOID
EGR VAC. REG. SOL.
INJ. 2
INJ. 4
INJ. 6
YEL/LT GRN
BLK
BLK/ LT GRN
SPOUT CHECK CONN.
MASS AIR FLOW SENSOR
BRN/LT BLU
LT GRN/ORG
INJ. 1
INJ. 3
INJ. 5
IDLE SPEED CNTRL VALVE
TAN/ RED
TO INSTRUMENT CLUSTER
GRY
WHT/PNK
TAN/LT BLU
TO EXTERIOR LIGHTS SYSTEM
TAN/ LT GRN
YEL
LT BLU/BLK
YEL/LT GRN
LT BLU/ RED
RED/LT GRN
DK BLU
GRY/YEL
BRN/PNK
TAN
WHT
BRN/YEL
TAN/BLK
ORG/BLK
34 16 56 36 4 50 9 11 2 57 37 33 58 59 35 39 15 12 21 22 17 1 8 13 31 54
EEC MODULE
7 10 47 48 26 27 28 46 25 38 49 51 53 52 55 5 30 44 18 19 42 40 60 6 3 20
PNK/ LT BLU
TO A/C SYSTEM
LT GRN/RED
ENGINE COOLANT TEMP. SENSOR
GRY/WHT
BRN
TO STI DATA LINK CONNECTOR
BRN/WHT
BRN/WHT
BRN/WHT
BRN/LT GRN
THROTTLE POSITION SENSOR
PRESSURE FEEDBACK EGR SENSOR
GRY/RED
YEL/LT GRN
POWER STEERING PRESSURE SWITCH
TO DATA LINK CONNECTOR
GRY/RED
GRY/RED
LT GRN/ PPL
ORG/ BLK
TAN/ WHT
WHT/ RED
GRY/RED
WHT/ YEL
ORG/ YEL
PPL/ ORG
TO AXODE TRANSAXLE
AIR CHARGE TEMP. SENSOR
GRY/BLK
TURBINE SHAFT SPEED SENSOR
LT BLU/YEL
MANUAL LEVER POSITION SENSOR
DK BLU/LT GRN
BLK/ORG
ORG/BLK
TO DATA LINK CONNECTOR
ORG/ BLK
BLK/ ORG
TO INSTRUMENT CLUSTER
HOT IN RUN
FUSE 5 15A
PPL/ORG
PPL/ORG
PPL/ORG
HEATED OXYGEN SENSOR #1
HEATED OXYGEN SENSOR #2
BLK/LT GRN
BLK/LT GRN
RED/BLK
BLK/ LT GRN
BLK/ LT GRN
BLK/ LT GRN
DK GRN/WHT
ORG/YEL
VEHICLE SPEED SENSOR
BLK
ORG/YEL
ORG/YEL
GRY/RED
GRY/RED
GRY/RED
GRY/RED
GRY/RED
GRY/RED
GRY/RED
GRY/RED
GRY/RED