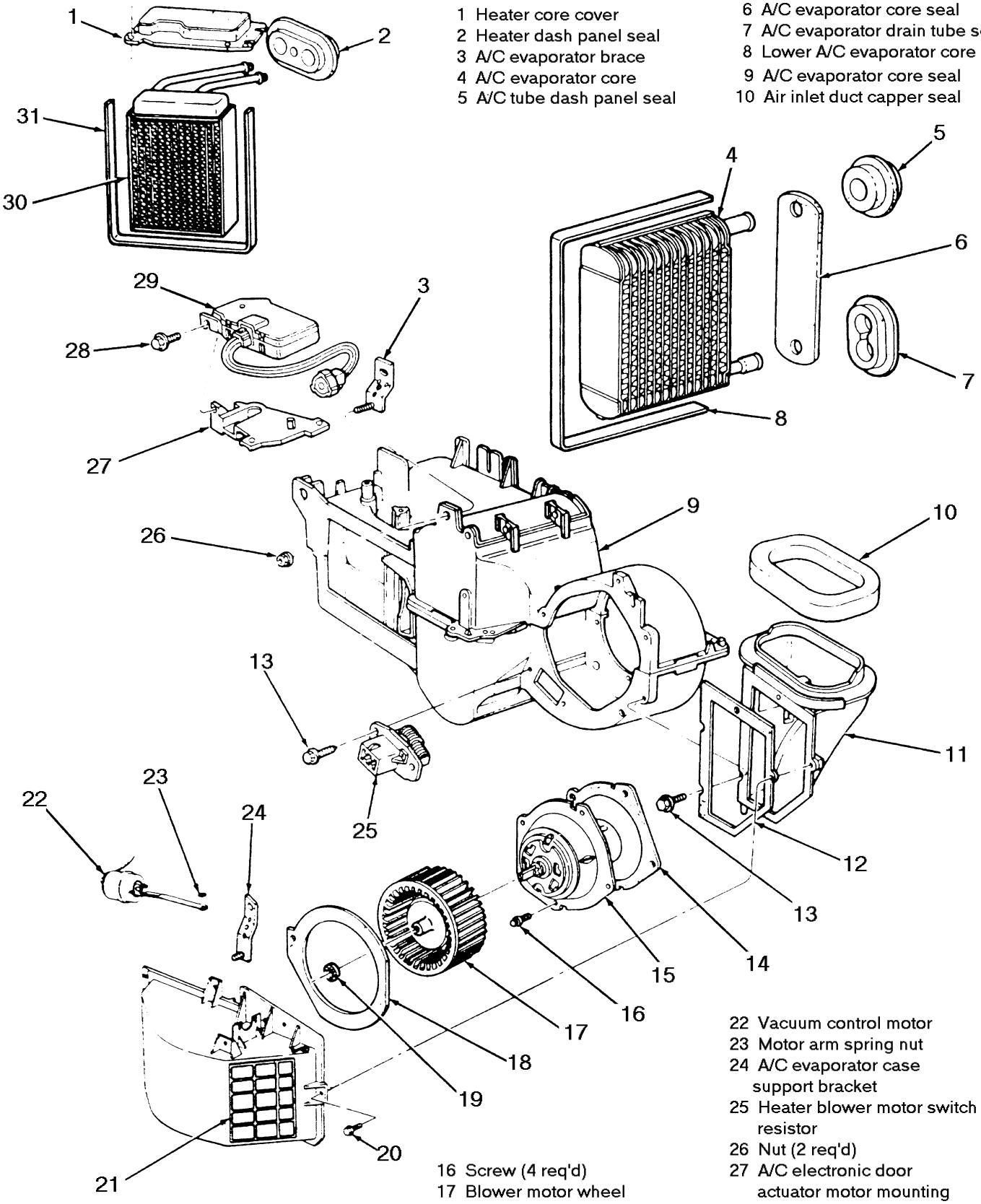

1 Heater core cover
2 Heater dash panel seal
3 A/C evaporator brace
4 A/C evaporator core
5 A/C tube dash panel seal
6 A/C evaporator core seal
7 A/C evaporator drain tube seal
8 Lower A/C evaporator core seal
9 A/C evaporator core seal
10 Air inlet duct capper seal

11 A/C air inlet duct
12 A/C air return duct gasket
13 Screw (2 req'd)
14 Blower motor seal
15 A/C blower motor

16 Screw (4 req'd)
17 Blower motor wheel
18 Blower motor inlet plate seal
19 Blower motor wheel retainer
20 Screw (6 req'd)
21 A/C recirculating air duct

22 Vacuum control motor
23 Motor arm spring nut
24 A/C evaporator case support bracket
25 Heater blower motor switch resistor
26 Nut (2 req'd)
27 A/C electronic door actuator motor mounting plate
28 Screw (3 req'd)
29 A/C electronic door actuator motor
30 Heater core
31 Heater core case seal